ASC SERIES 30 Watts

KEY FEATURES

- Switching Power Module for PCB Mountable
- Fully Encapsulated Plastic Case
- Universal Input Range 90-264VAC, 47-440 Hz
- Regulated Output
- Low Ripple and Noise
- High Efficiency
- CE, CB, cUL, TUV Approvals
- 2-Year Product Warranty

E199779
LEVEL3

ELECTRICAL SPECIFICATIONS

Model No. (Single Output)		ASC-3.3S	ASC-5S	ASC-12S	ASC-15S	ASC-24S
Max Output Wattage (W)		20W	30W	30W	30W	30W
Input	Voltage	90-264 VAC or 120-370 VDC				
	Frequency (Hz)	47-440 Hz				
	Current (Full load)	520 mA max. (115 VAC) / 320 mA max. (230 VAC)				
	Inrush Current (<2ms)	10 A max. (115 VAC) /20 A max. (230 VAC)				
	Leakage Current	0.75 mA max.				
	External Fuse (recommend)	1.5 A slow blow type				
Output	Voltage (V.DC.)	3.3V	5V	12V	15V	24V
	Voltage Accuracy	±2%				
	Current (mA) max	6000	6000	2500	2000	1250
	Line Regulation (LL-HL) (typ.)	±1%				
	Load Regulation (5-00%) (typ.)	±1%				
	Minimum Load	5%	4%	2%	2%	2%
	Maximum Capacitive Load	470-23,000μF depending on model				
	Ripple	<0.2% Vout +40mV max (Vp-p)				
	Noise	<0.5% Vout +50mV max (Vp-p)				
	Efficiency	70%	75%	80%	80%	77%
	Hold-up Time	15 ms min.				
	Switching Frequency	100 kHz				
Protection	Over Power Protection	Hiccup technique, auto-recovery				
	Over Voltage Protection	Zener diode clamp				
	Short Circuit Protection	Hiccup mode, indefinite (automatic recovery)				
Isolation	Input-Output (V.AC)	3000 V				
Environment	Operating Temperature	-25°C…+70°C (with derating)				
	Storage Temperature	-40°C…+85°C				
	Temperature Coefficient	±0.02%/°C				
	Humidity	95% RH				
	MTBF	>200,000 h @ 25°C (MIL-HDBK-217F)				
Physical	Dimension (L x W x H)	3.5 x 2.5 x 0.98 Inches (89.0 x 63.5 x 25.0 mm) Tolerance ±0.5 mm				
	Case Material	Plastic resin with Fiberglass (flammability to UL 94V-0)				
	Weight	220 g				
	Cooling Method	Free air convection				
Safety	Agency Approvals	UL/cUL, CE, TUV, CB				
EMC	EMI (Conducted & Radiated Emission)	EN 55022 class B				
	EMS (Noise Immunity)	EN 55024				

All specifications valid at nominal input voltage, full load and +25°C after warm-up time unless otherwise stated.

ELECTRICAL SPECIFICATIONS

Model No. (Dual、Triple Output)		ASC-5D	ASC-12D	ASC-15D	ASC-5S12S	ASC-5S12D	ASC-5S15D
Max Output Wattage (W)		30W	30W	30W	30W	30W	30W
Input	Voltage	90-264 VAC or 120-370 VDC					
	Frequency (Hz)	47-440 Hz					
	Current (Full load)	520 mA max. (115 VAC) / 320 mA max. (230 VAC)					
	Inrush Current (<2ms)	10 A max. (115 VAC) /20 A max. (230 VAC)					
	Leakage Current	0.75 mA max.					
	External Fuse (recommend)	1.5 A slow blow type					
Output	Voltage (V.DC.)	±5V	±12V	±15V	5/12	5/±12	5/±15
	Voltage Accuracy	±2%					
	Current (mA) max	±3000	±1250	±1000	3000/1250	3000/±630	3000/±500
	Line Regulation (LL-HL) (typ.)	±1%			±1% / ±5%		
	Load Regulation (5-00%) (typ.)	±3%			±2% / ±6%		
	Minimum Load	2%	3%	1%	20%	20%	20%
	Maximum Capacitive Load	470-23,000μF depending on model					
	Ripple	<0.2% Vout +40mV max (Vp-p)					
	Noise	<0.5% Vout +50mV max (Vp-p)					
	Efficiency	73%	78%	76%	77%	77%	76%
	Hold-up Time	15 ms min.					
	Switching Frequency	100 kHz					
Protection	Over Power Protection	Hiccup technique, auto-recovery					
	Over Voltage Protection	Zener diode clamp					
	Short Circuit Protection	Hiccup mode, indefinite (automatic recovery)					
Isolation	Input-Output (V.AC)	3000 V					
Environment	Operating Temperature	-25°C…+70°C (with derating)					
	Storage Temperature	-40°C…+85°C					
	Temperature Coefficient	±0.02%/°C					
	Humidity	95% RH					
	MTBF	>200,000 h @ 25°C (MIL-HDBK-217F)					
Physical	Dimension (L x W x H)	3.5 x 2.5 x 0.98 Inches (89.0 x 63.5 x 25.0 mm) Tolerance ±0.5 mm					
	Case Material	Plastic resin with Fiberglass (flammability to UL 94V-0)					
	Weight	220 g					
	Cooling Method	Free air convection					
Safety	Agency Approvals	UL/cUL, CE, TUV, CB					
EMC	EMI (Conducted & Radiated Emission)	EN 55022 class B					
	EMS (Noise Immunity)	EN 55024					

All specifications valid at nominal input voltage, full load and +25°C after warm-up time unless otherwise stated.

Note

1. The triple output required a minimum 20% loading on the output to maintain specified regulation. Operation under no-load condition will not damage these devices; however they may not meet all listed specification.

2. Load regulation for triple output:
   Main output (V1): 20% to 100% with 20% to 100% balanced on auxiliaries.
   Auxiliary outputs (V2 and V3): 20% to 100% balanced on all outputs.

3. Cross regulation for triple output:
   Main output 100% load, auxiliary 100%, other auxiliary 25% to 100%.
   Auxiliary outputs (V2 and V3): Main output 100% load, auxiliary 100%, other auxiliary 25% to 100% or main output 25%, auxiliary 25%, other auxiliary 25% to 100%.

MECHANICAL DIMENSION (Top View)

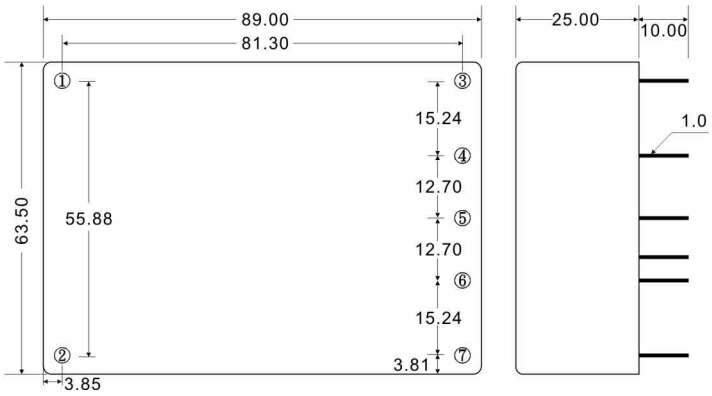

PIN#	SINGLE	Dual	5S/12S	Triple
1	AC IN (N)	AC IN (N)	AC IN (N)	AC IN (N)
2	AC IN (L)	AC IN (L)	AC IN (L)	AC IN (L)
3	+DC OUT	+DC OUT	+12V	+DC OUT
4	NO PIN	NO PIN	+5V	+5V
5	-DC OUT	COMMON	+12 RTN	COMMON
6	NO PIN	NO PIN	+5 RTN	+5 RTN
7	NOCONNECT	-DC OUT	NO PIN	-DC OUT

BLOCK DIAGRAM

Single Output

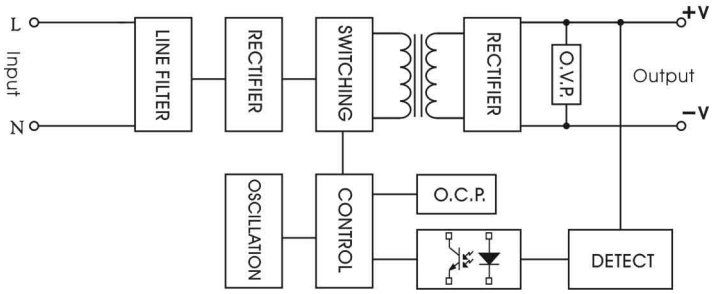

DERATING

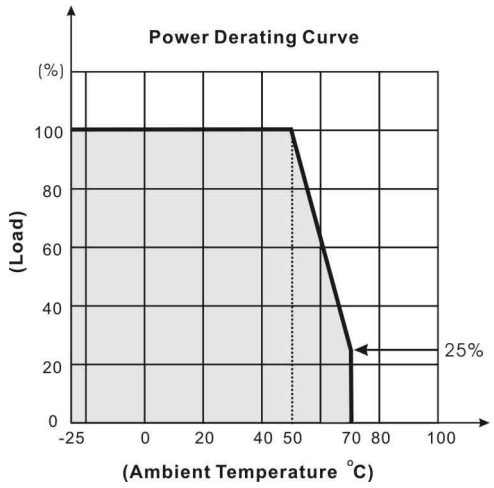

Dual Output

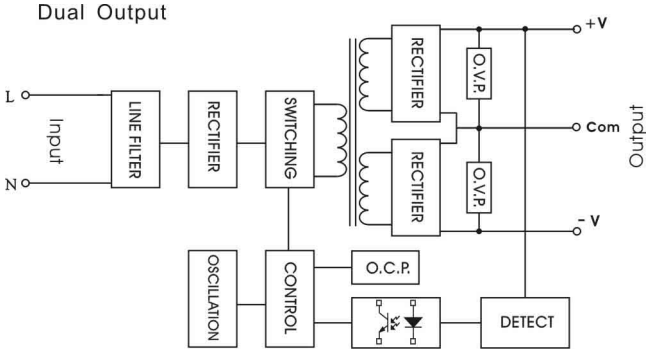
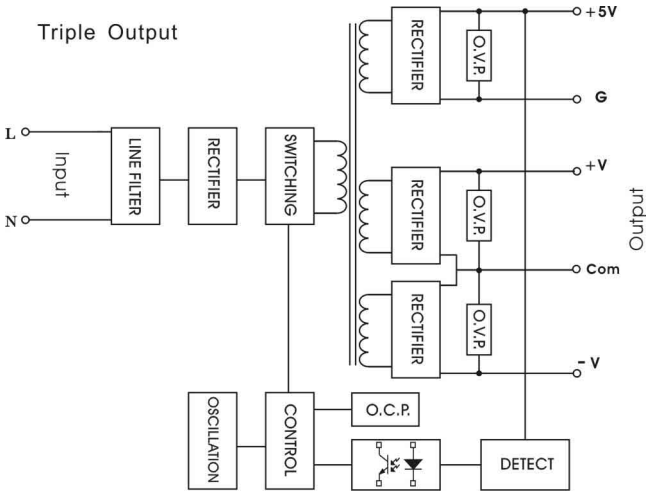
Triple Output